MECHATRONICS SYSTEM INTEGRATION (MCTA 3203)
SEM 2 2025/2026

LAB 02:
DIGITAL LOGIC SYSTEM

SECTION 1
GROUP 10

INSTRUCTOR:
DR ZULKIFLI BIN ZAINAL ABIDIN

Name	Matric Number
NUR IRDINA BINTI OMAR	2312378
MUHAMMAD IRSYAD ILHAM BIN AZIZAN	2217555
NURIN NAJWA BINTI KAMARUZAMAN	2416554

DATE OF SUBMISSION: WEDNESDAY, 18 MARCH 2026

Abstract

This experiment was conducted to explore how a 7- segment display can be connected and controlled using a Cytron CT-UNO (Arduino Uno compatible) and to understand the basic concept of digital logic system .The circuit was set up by connecting each segment (A-G) of the display to the board using current limiting resistors, while push buttons were used as input to perform increment and reset functions. Also , the system was programmed using Arduino IDE to display numbers from 0 to 9 sequentially and based on user input.

From the results, the displayed number increased with each button press and reset back to zero when required, showing a consistent and accurate response. In conclusion, the experiment successfully demonstrated how digital inputs can be processed by a microcontroller to control an output device.

Table of Contents

Abstract..... 1
1.Introduction.....3
2. Materials And Equipments.....4
3. Experimental Setup..... 4
4. Methodology..... 5
5.Data Collection.....8
6. Data Analysis..... 10
7. Result..... 11
8. Discussion.....11
9. Conclusion..... 13
10. Recommendations.....14
11. References.....14
Appendices..... 15
Acknowledgements.....19
Student's Declaration.....20

1.Introduction

The purpose of this experiment is to study and understand the interfacing of a 7-segment display with an Arduino Uno microcontroller. This experiment focuses on the application of digital logic concepts and electronic interfacing techniques to control a display device using programmable hardware.

In digital systems, a 7-segment display is used for representing numerical values. It consists of seven individual segments labeled A to G, which can be turned on or off in different combinations to form digits from 0 to 9. By utilizing the digital output pins of the Arduino Uno, each segment can be controlled to produce the desired numeric output.

Furthermore, as discussed in The Arduino Uno Technical Reference, microcontrollers operate by processing digital inputs and executing programmed instructions to generate corresponding outputs. In this experiment, the Arduino implements a simple counter logic, demonstrating how embedded systems can be used to control electronic devices efficiently.

This experiment also introduces fundamental concepts such as basic logic control, digital signal processing, and hardware-software integration. Push buttons are used as input devices to allow user interaction, enabling functions such as incrementing numbers and resetting the display. Additionally, resistors are used to regulate current flow and ensure safe operation of the electronic components.

2. Materials And Equipments

- 1 Cytron CT-UNO (Arduino Uno compatible)
- 1 Common cathode 7-segment display
- 8 220-ohm resistors
- 10k-ohm resistors
- 2 Pushbuttons
- Jumper wires
- Breadboard

3. Experimental Setup

1. Common cathode 7-segment display to the Cytron CT-UNO (Arduino Uno compatible) connections:
    - Each segment pin (a–g) of the display was connected to Arduino digital pins D2–D8 through 220 Ω resistors to limit the current flow.
    - The common cathode pin of the display was connected to one of the Arduino GND pins.

2. Pushbuttons to the Cytron CT-UNO:
    - One leg of the first pushbutton was connected to Arduino pin D10 to function as the increment button.
    - One leg of the second pushbutton was connected to Arduino pin D11 to act as the reset button.
    - The opposite legs of both pushbuttons were connected to the ground rail of the breadboard.
    - A 10 kΩ pull-up resistor was connected to the increase button, with one end attached to the corresponding digital input pin (D10) and the other end connected to the 5V line.

3. The Cytron CT-UNO was powered through a USB connection, providing both 5V and GND to the entire circuit.

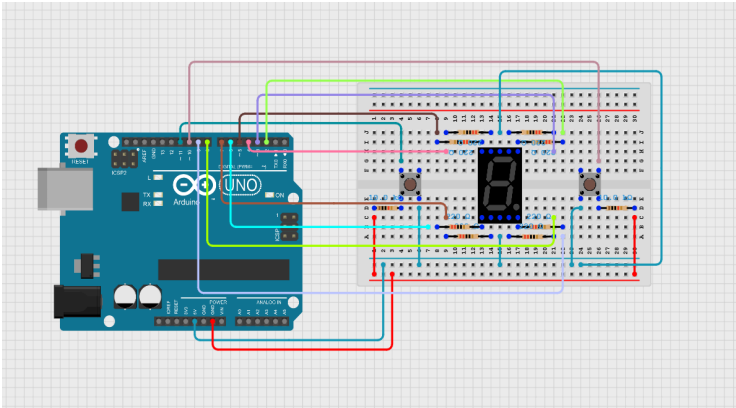

Figure 3.1 Circuit Design Schematics using Tinkercad

4. Methodology

Circuit Construction

The circuit was set up on a breadboard based on the figure 3.1. Each segment (A–G) of the 7-segment display connected to the digital pins (D2-D8) of the Cytron CT-UNO using 220Ω resistors to limit the current. The common cathode of the display was connected to GND.

Pushbutton Connections

Two push buttons were used in this experiment. One button was used to increase the displayed number correctly and the other was used to reset the number back to zero. Each button was connected to digital pins D10 and D11 with 10kΩ pull up resistors to make the input stable. Each button was also connected to GND on one side and to 5V through the pull up resistors.

Code Upload

-The Arduino IDE was used to write and upload the code to the Cytron CT-UNO. The program was written to control the segments so that numbers from 0 to 9 could be displayed on the 7-segment display.

When the code display number 0 to 9 sequentially:

-Coding to display the number from 0 to 9 continuously while following the sequence. Delays were added to make each number stay visible for 2 seconds before changing.
Code upload :

```
const int segmentA = 3;
const int segmentB = 2;
const int segmentC = 8;
const int segmentD = 7;
const int segmentE = 6;
const int segmentF = 4;
const int segmentG = 5;

void setup() {
// Ini alize the digital pins as OUTPUTs
pinMode(segmentA, OUTPUT);
pinMode(segmentB, OUTPUT);
pinMode(segmentC, OUTPUT);
pinMode(segmentD, OUTPUT);
pinMode(segmentE, OUTPUT);
pinMode(segmentF, OUTPUT);
pinMode(segmentG, OUTPUT);
}
// 0 = A,B,C,D,E,F
// 1 = B,C
// 2 = A,B,G,E,D
// 3 = A,B,C,D,G
// 4 = A,F,G,C,D
void loop() {
// Turn on each segment one by one
digitalWrite(segmentA, LOW);
digitalWrite(segmentB, LOW);
digitalWrite(segmentC, LOW);
digitalWrite(segmentD, LOW);
digitalWrite(segmentE, LOW);
digitalWrite(segmentF, LOW);
digitalWrite(segmentG, HIGH);
  delay(2000);
  digitalWrite(segmentA, HIGH);
  digitalWrite(segmentB, HIGH);
  digitalWrite(segmentC, HIGH);
  digitalWrite(segmentD, HIGH);
  digitalWrite(segmentE, HIGH);
  digitalWrite(segmentF, HIGH);
delay(2000);
  digitalWrite(segmentB, LOW);
  digitalWrite(segmentC, LOW);
  delay(2000);
  digitalWrite(segmentB, HIGH);
  digitalWrite(segmentC, HIGH);
  delay(2000);
  digitalWrite(segmentA, LOW);
  digitalWrite(segmentB, LOW);
  digitalWrite(segmentG, LOW);
  digitalWrite(segmentE, LOW);
  digitalWrite(segmentD, LOW);
  delay(2000);
  digitalWrite(segmentA, HIGH);
  digitalWrite(segmentB, HIGH);
  digitalWrite(segmentG, HIGH);
  digitalWrite(segmentE, HIGH);
  digitalWrite(segmentD, HIGH);
  delay(2000);
  digitalWrite(segmentA, LOW);
  digitalWrite(segmentB, LOW);
  digitalWrite(segmentC, LOW);
  digitalWrite(segmentD, LOW);
  digitalWrite(segmentG, LOW);
  delay(2000);
  digitalWrite(segmentA, HIGH);
  digitalWrite(segmentB, HIGH);
  digitalWrite(segmentC, HIGH);
  digitalWrite(segmentD, HIGH);
  digitalWrite(segmentG, HIGH);
   delay(2000);
  digitalWrite(segmentB, LOW);
  digitalWrite(segmentC, LOW);
  digitalWrite(segmentF, LOW);
  digitalWrite(segmentG, LOW);
  delay(2000);
  digitalWrite(segmentB, HIGH);
  digitalWrite(segmentC, HIGH);
  digitalWrite(segmentF, HIGH);
  digitalWrite(segmentG, HIGH);
  delay(2000);
  digitalWrite(segmentA, LOW);
  digitalWrite(segmentC, LOW);
  digitalWrite(segmentD, LOW);
  digitalWrite(segmentF, LOW);
  digitalWrite(segmentG, LOW);
```

```
  delay(2000);
  digitalWrite(segmentA, HIGH);
  digitalWrite(segmentC, HIGH);
  digitalWrite(segmentD, HIGH);
  digitalWrite(segmentF, HIGH);
  digitalWrite(segmentG, HIGH);
  delay(2000);
  digitalWrite(segmentA, LOW);
digitalWrite(segmentC, LOW);
digitalWrite(segmentD, LOW);
digitalWrite(segmentE, LOW);
digitalWrite(segmentF, LOW);
digitalWrite(segmentG, LOW);
  delay(2000);
  digitalWrite(segmentA, HIGH);
digitalWrite(segmentC, HIGH);
digitalWrite(segmentD, HIGH);
digitalWrite(segmentE, HIGH);
digitalWrite(segmentF, HIGH);
digitalWrite(segmentG, HIGH);
  delay(2000);
  digitalWrite(segmentA, LOW);
digitalWrite(segmentB, LOW);
digitalWrite(segmentC, LOW);
  delay(2000);
   digitalWrite(segmentA, HIGH);
digitalWrite(segmentB, HIGH);
digitalWrite(segmentC, HIGH);
  delay(2000);
  digitalWrite(segmentA, LOW);
digitalWrite(segmentB, LOW);
digitalWrite(segmentC, LOW);
digitalWrite(segmentD, LOW);
digitalWrite(segmentE, LOW);
digitalWrite(segmentF, LOW);
digitalWrite(segmentG, LOW);
  delay(2000);
  digitalWrite(segmentA, HIGH);
digitalWrite(segmentB, HIGH);
digitalWrite(segmentC, HIGH);
digitalWrite(segmentD, HIGH);
digitalWrite(segmentE, HIGH);
digitalWrite(segmentF, HIGH);
digitalWrite(segmentG, HIGH);
  delay(2000);
  digitalWrite(segmentA, LOW);
```

	digitalWrite(segmentB, LOW);
	digitalWrite(segmentC, LOW);
	digitalWrite(segmentD, LOW);
	digitalWrite(segmentF, LOW);
	digitalWrite(segmentG, LOW);
	delay(2000);
	digitalWrite(segmentA, HIGH);
	digitalWrite(segmentB, HIGH);
	digitalWrite(segmentC, HIGH);
	digitalWrite(segmentD, HIGH);
	digitalWrite(segmentF, HIGH);
	digitalWrite(segmentG, HIGH);
	delay(2000);{
	//

5.Data Collection

This experiment was conducted to observe the operation of a 7-segment display connected to a Cytron CT-UNO (Arduino-compatible) . Therefore , from this experiment , there are some data that has been collected. The output was recorded based on the increment and reset push button inputs , and the corresponding display recorded.

Observation Data

Button Pressed	Previous Number	Displayed Number
Initial	-	0
Increment (1)	0	1
Increment (2)	1	2
Increment (3)	2	3
Increment (4)	3	4
Increment (5)	4	5
Increment (6)	5	6
Increment (7)	6	7
Increment (8)	7	8
Increment (9)	8	9

Button Pressed	Previous Number	Displayed Number
Initial	-	0
Reset	9	0

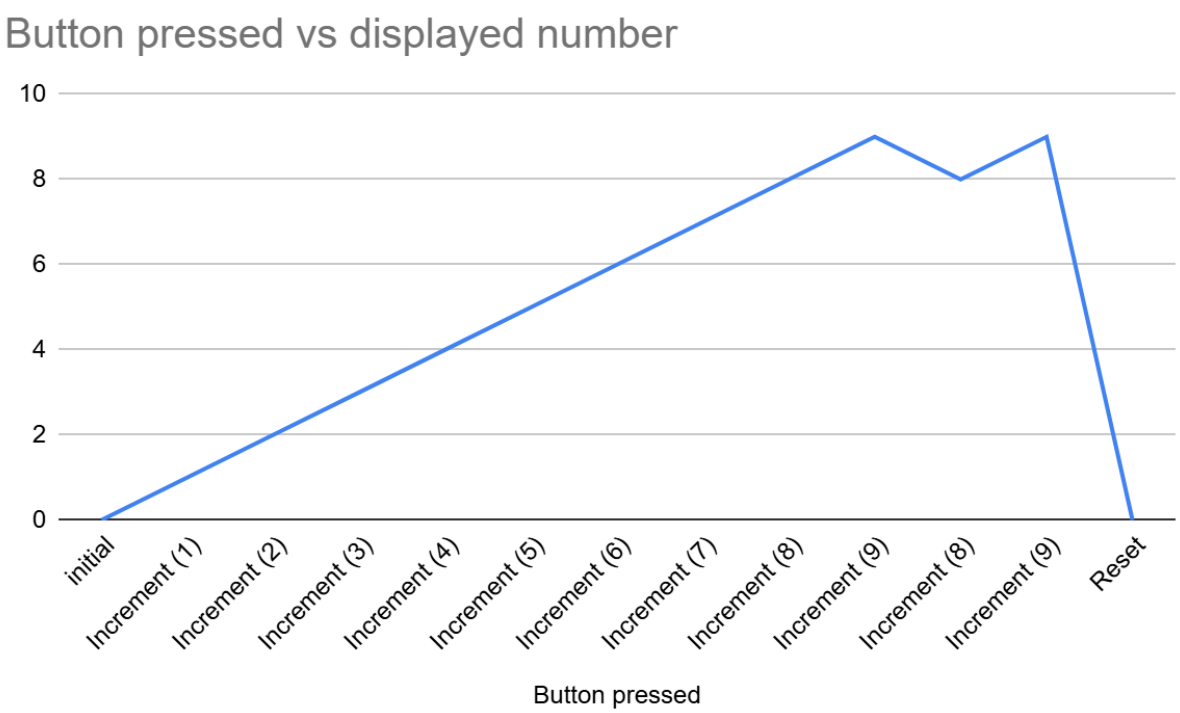

Figure 5.1 shows the relationship between button presses and the displayed number.

6. Data Analysis

From the observations obtained during the experiment, the relationship between the number of button presses and the displayed output on the 7-segment display shows a clear and consistent pattern:

1. Increment Behavior

- Each time the increment push button is pressed, the displayed number increases by one.
- The output follows a direct proportional relationship where:
  Displayed Number = Number of Button Presses (up to 9)

- Each number corresponds to a specific combination of activated segments (A–G), controlled by the Arduino digital output pins.

2. System Response

- The Arduino successfully processes each button input and updates the display accordingly by sending HIGH and LOW signals to the respective segments.
- The display changes immediately after each valid button press, showing that the microcontroller executes the programmed logic effectively.
- The reset button correctly returns the display value to zero, confirming proper input control functionality.

3. Range and Wrap-around

- The system operates within a single-digit range (0–9).
- After reaching the value 9, the display resets back to 0 upon the next increment.
- This demonstrates a cyclic counting behavior suitable for basic counter applications.

4. Accuracy and Stability

- The use of current-limiting resistors ensures stable LED operation by preventing excessive current flow.
- Pull-up resistors (10kΩ) help maintain a steady input signal and avoid floating states.
- No skipped or repeated counts were observed, indicating that the system is stable and reliable during operation.

5. Conclusion

- The experimental results confirm that the system functions as intended, where the displayed number increases sequentially with each button press.
- The integration of hardware (7-segment display and resistors) and software (Arduino programming) produces accurate, responsive, and consistent output.

Overall, the experiment confirms that digital signals from the Arduino can effectively control a 7-segment display, and that the combination of hardware interfacing and software programming produces the desired output behavior.

7. Result

Condition	Display
Increase button pressed	The number increase by 1
Reset button pressed	Reset the number to 0

The experiment successfully:

- Display the number from 0-9.
- Increase the number by 1 using the increase button.
- Reset the number to 0 using the reset button.
- Receive input from the user and send digital signals to display number (0-9) on the 7-segment display.

8. Discussion

This experiment shows that the Arduino successfully controls the 7-segment display by sending specific HIGH/LOW signals to each segment. The push buttons act as inputs, sending digital signals to the Arduino to perform increment and reset operations, while the 7-segment display serves as the output, visually showing numbers from 0 to 9. The system demonstrates the fundamental embedded concept of input, processing, and output, where the Arduino reads the input signals, processes the counting logic, and updates the display accordingly.

Signals	LED in each segment (expected)	LED in each segment (observed)
LOW	OFF	ON
HIGH	ON	OFF

8.1 Source of error

Loose connection:

- Poor contact can cause segments or buttons to not work properly or intermittently.

Incorrect wiring of 7-segment display:

- Segments (a–g) may be connected to wrong Arduino pins, causing incorrect numbers to display.

Incorrect code logic:

- Errors in segment mapping or counter logic can produce wrong outputs

8.2 How to interface I2C LCD with Arduino

1. Arduino and LCD connections

    - VCC → 5V
    - GND → GND
    - SDA → A4
    - SCL → A5

2. Arduino code principle

```
//include libraries
#include <Wire.h>                // I2C communication library
#include <LiquidCrystal_I2C.h>    // LCD control library

//initialize the LCD
LiquidCrystal_I2C lcd(0x27, 16, 2); // 16x2 LCD

//Setup Function
void setup() {
  lcd.init();        // Initialize LCD
  lcd.backlight();   // Turn on backlight
  lcd.print("Hello!"); // Display text
}

//Loop function
void loop() {
  lcd.setCursor(0,1);          // Move to row 2, column 0
  lcd.print(millis()/1000);    // Show seconds elapsed
}
```

- Commands or data sent to the LCD via I2C serial communication.
- The library handles all the timing and pin toggling for you.
- Only 2 Arduino pins are needed, no manual control of all LCD pins.

3. Comparison with a 7-Segment Display with a LED Matrix

Feature	7-Segment Display	LED Matrix
Pins needed	7–8 pins per digit (unless using a driver IC)	Many (rows × columns), or 2 with I2C/SPI driver
Communication type	Parallel (direct HIGH/LOW to each segment)	Parallel or serial with driver IC (MAX7219/HT16K33)
Coding Principle	Turn specific segments ON/OFF to show a number	Update patterns of LEDs; often requires scanning
Complexity	Needed for multiple digits	Medium-High, can use libraries with driver ICs

9. Conclusion

This experiment demonstrated how to interface a common cathode 7-segment display with an Arduino Uno and control it using a push button. It helps us to understand how the push buttons act as inputs, sending digital signals to the Arduino to control the 7-segment display which serves as the output. It also shows how everything needs to be precise especially in the circuit connection as it will produce wrong output. Overall, the experiment illustrates the fundamental concept of an embedded system, where inputs are processed by a microcontroller to produce outputs, and provides a foundation for building more complex counting or display-based projects. Lastly, this hands-on experience will be really helpful for us during working with embedded systems in designing more complex projects in the future.

10. Recommendations

Several changes can be suggested to improve the system's efficiency based on the experiment's findings. First, the system would be more useful for real-world applications like counters and timers if numerous 7-segment displays were used to represent multi-digit values.

Secondly, the use of a shift register like 74HC595 is recommended to reduce the number of digital pins required from the Arduino. This will make the circuit more efficient and allow expansion to more complex systems without being limited by the number of available pins.

Lastly, it is recommended to ensure proper wiring management and circuit organization to avoid connection errors. Testing the circuit using simulation tools before physical implementation can also help reduce mistakes and improve efficiency during the experiment.

11. References

All About Circuits. (2015). *Interface a Seven Segment Display to an Arduino*.
https://www.allaboutcircuits.com/projects/interface-a-seven-segment-display-to-an-arduino/

Arduino (2026), Arduino Uno R3 Datasheet and Technical Documentation
https://docs.arduino.cc/hardware/uno-rev3

Arduino. (2026). *Guide to Shift Out using 74HC595 Shift Register*.
https://docs.arduino.cc/tutorials/communication/guide-to-shift-out/

Appendices

Circuit diagram

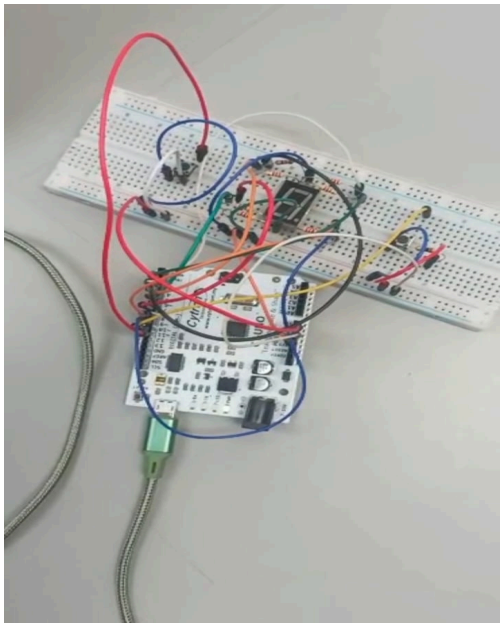

Figure 12.1 : Real circuit setup

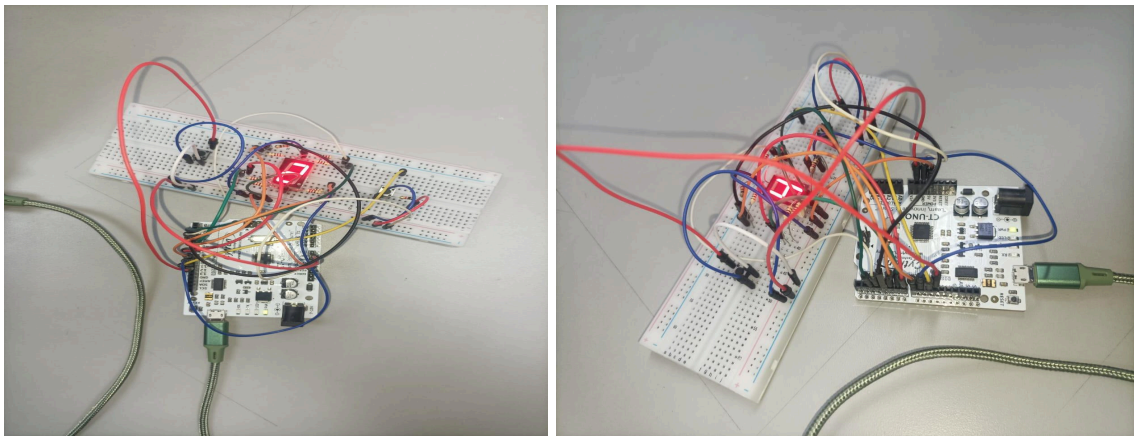

Figure 12.2: Sequential number display with programmed delay on 7-segment display

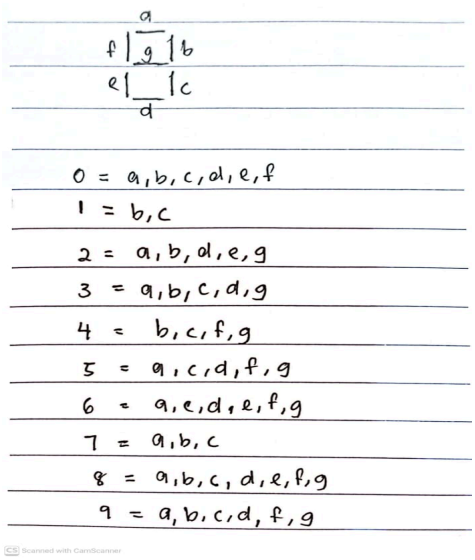

Figure 12.3 : 7-segment LED display configuration

<u>Code snippets</u>

<u>Code when push button increment and reset button</u>

```
// ===== 7-Segment Pins =====
const int segmentA = 3;
const int segmentB = 2;
const int segmentC = 8;
const int segmentD = 7;
const int segmentE = 6;
const int segmentF = 4;
const int segmentG = 5;

// ===== Push Buttons =====
const int incButtonPin = 10;
const int resetButtonPin = 11;

int count = 0;
int lastIncState = HIGH;
```

```
int lastResetState = HIGH;

void setup() {
  pinMode(segmentA, OUTPUT);
  pinMode(segmentB, OUTPUT);
  pinMode(segmentC, OUTPUT);
  pinMode(segmentD, OUTPUT);
  pinMode(segmentE, OUTPUT);
  pinMode(segmentF, OUTPUT);
  pinMode(segmentG, OUTPUT);

  pinMode(incButtonPin, INPUT_PULLUP);
  pinMode(resetButtonPin, INPUT_PULLUP);

  displayDigit(0);
}

void displayDigit(int num) {
  // Tutup semua segment dulu
  digitalWrite(segmentA, HIGH);
  digitalWrite(segmentB, HIGH);
  digitalWrite(segmentC, HIGH);
  digitalWrite(segmentD, HIGH);
  digitalWrite(segmentE, HIGH);
  digitalWrite(segmentF, HIGH);
  digitalWrite(segmentG, HIGH);

  switch(num) {
    case 0: digitalWrite(segmentA,LOW); digitalWrite(segmentB,LOW);
digitalWrite(segmentC,LOW); digitalWrite(segmentD,LOW); digitalWrite(segmentE,LOW);
digitalWrite(segmentF,LOW); break;
    case 1: digitalWrite(segmentB,LOW); digitalWrite(segmentC,LOW); break;
```

```
  case 2: digitalWrite(segmentA,LOW); digitalWrite(segmentB,LOW);
digitalWrite(segmentG,LOW); digitalWrite(segmentE,LOW); digitalWrite(segmentD,LOW);
break;
  case 3: digitalWrite(segmentA,LOW); digitalWrite(segmentB,LOW);
digitalWrite(segmentC,LOW); digitalWrite(segmentD,LOW); digitalWrite(segmentG,LOW);
break;
  case 4: digitalWrite(segmentF,LOW); digitalWrite(segmentG,LOW);
digitalWrite(segmentB,LOW); digitalWrite(segmentC,LOW); break;
  case 5: digitalWrite(segmentA,LOW); digitalWrite(segmentF,LOW);
digitalWrite(segmentG,LOW); digitalWrite(segmentC,LOW); digitalWrite(segmentD,LOW);
break;
  case 6: digitalWrite(segmentA,LOW); digitalWrite(segmentF,LOW);
digitalWrite(segmentE,LOW); digitalWrite(segmentD,LOW); digitalWrite(segmentC,LOW);
digitalWrite(segmentG,LOW); break;
  case 7: digitalWrite(segmentA,LOW); digitalWrite(segmentB,LOW);
digitalWrite(segmentC,LOW); break;
  case 8: digitalWrite(segmentA,LOW); digitalWrite(segmentB,LOW);
digitalWrite(segmentC,LOW); digitalWrite(segmentD,LOW); digitalWrite(segmentE,LOW);
digitalWrite(segmentF,LOW); digitalWrite(segmentG,LOW); break;
  case 9: digitalWrite(segmentA,LOW); digitalWrite(segmentB,LOW);
digitalWrite(segmentC,LOW); digitalWrite(segmentD,LOW); digitalWrite(segmentF,LOW);
digitalWrite(segmentG,LOW); break;
 }
}

void loop() {
 int incState = digitalRead(incButtonPin);
 int resetState = digitalRead(resetButtonPin);

 // ===== RESET BUTTON=====
 if (lastResetState == HIGH && resetState == LOW) {
  count = 0;
  displayDigit(0);
  delay(200);
```

```
  }

  // ===== INCREMENT BUTTON =====
  else if (lastIncState == HIGH && incState == LOW) {
    count++;
    if (count > 9) count = 0;
    displayDigit(count);
    delay(200);
  }

  lastIncState = incState;
  lastResetState = resetState;
}
```

Acknowledgements

First of all , we would like to express our gratitude to our lecturer, Dr Zulkifli bin Zainal Abidin for his guidance and help throughout this project. His explanations made it easier for us to understand how the system works , especially when using the Cytron CT-UNO to control the 7-segment display.

We also want to thank the lab assistant for allowing us to use the laboratory even outside of class hours to complete the experiment . This opportunity really helped us especially when we were setting up the circuit , testing the push button, and making sure everything worked properly.

Besides that , we would like to thank our group members for the teamwork. Everyone helped out , whether in wiring the circuit , doing the coding and solving the problems when errors happened during the experiment. Also, we would like to give thanks to our friends who helped us directly or indirectly throughout the experiment.

Student's Declaration

Certificate of Originality and Authenticity

This is to certify that we are **responsible** for the work submitted in this report, that **the original work** is our own except as specified in the references and acknowledgement, and that the original work contained herein have not been untaken or done by unspecified sources or persons.

We hereby certify that this report has **not been done by only one individual** and **all of us have contributed to the report.** The length of contribution to the reports by each individual is noted within this certificate.

We also hereby certify that we have **read** and **understand** the content of the total report and no further improvement on the reports is needed from any of the individual's contributors to the report.

We therefore, agreed unanimously that this report shall be submitted for **marking** and this **final printed report** has been **verified by us.**

Signature: Read [/]
Name: Nur Irdina Binti Omar Understand [/]
Matric Number: 2312378 Agree [/]
Contribution: Abstract , Methodology , Material and Equipment , Data Collection

Signature: Read [/]
Name: Muhammad Irsyad Ilham Bin Azizan Understand [/]
Matric Number: 2217555 Agree [/]
Contribution: Introduction, Recommendation, Data Analysis, Acknowledgements

Signature: Read [/]
Name: Nurin Najwa binti Kamaruzaman Understand [/]
Matric Number: 2416554 Agree [/]
Contribution: Experimental Setup, Results, Discussion, Conclusion